Check of the equipment and position in competition

Julien Carron
Technological Coordinator

Union Cycliste Internationale

Département Sport et Technique

Goals of the equipment checks

- Check of the conformity of the bicycle with:
  - UCI technical regulations (art 1.3.001 to 1.3.034)
  - Technical regulations for bicycles, a practical guide to implementation
  - Bicycle measuring jig for time trial
  - Small equipment (meter, caliper, level, plumb line,…)
- Clear and adapted procedures for the check of the equipment
- The enforcement of the rules improves the fairness and safety during the races:
  - Limit the impact of the equipment on the performance
  - The race victory to the best rider, not the best machine
  - The preservation of the culture and image of the bicycle
  - Principles of the Lugano Charter

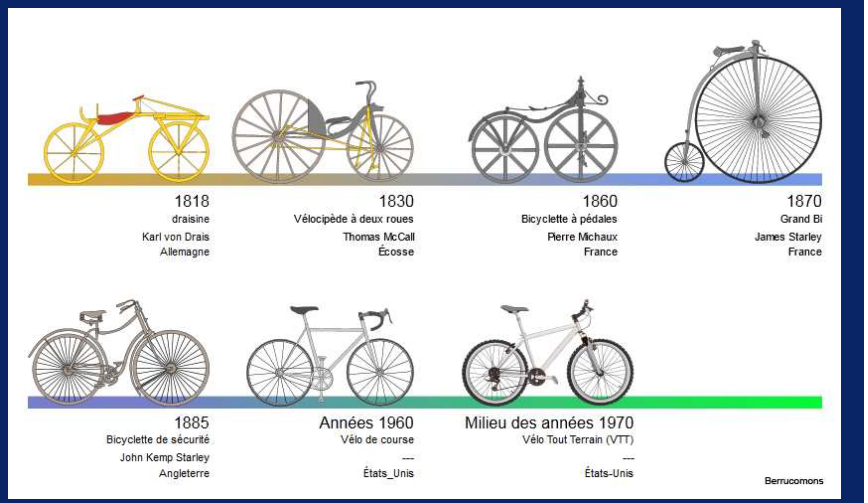

Types of checks

- Checks for massed start races
- Checks for time trial events
- General checks
- Checks of the approval for the frames and forks

Checks for massed start races

- No systematic checks as for time trial or track events
- Approval procedure verifies the frames and the forks in advance
- Checks at the signature of the riders or at the team's parking area
- In any case, the bikes can be requisitioned and checked at the end of the race

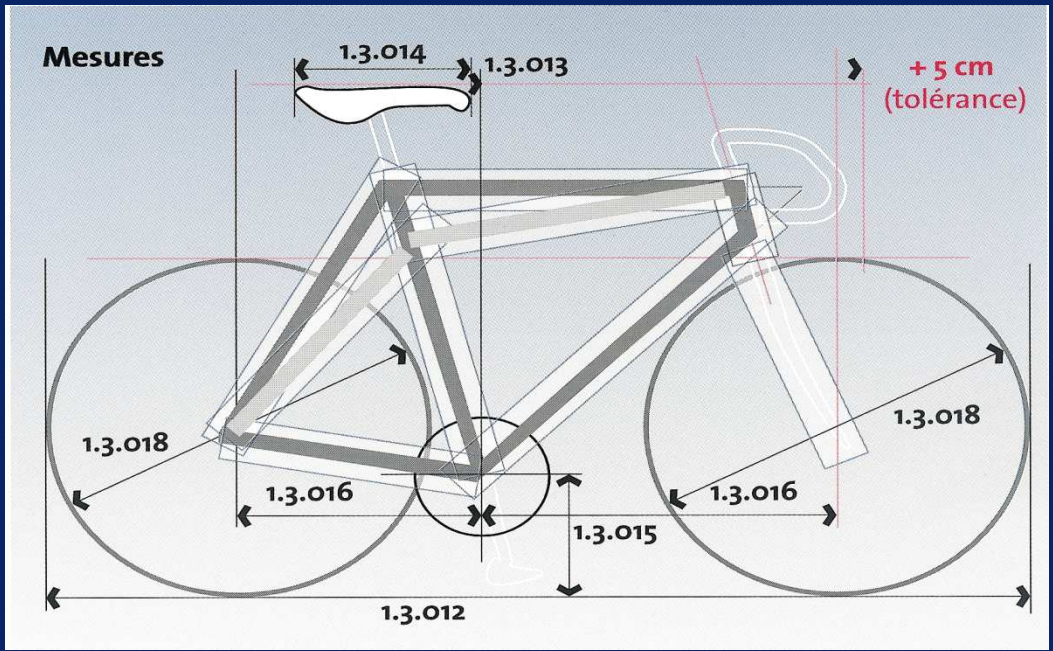

Checks for massed start races

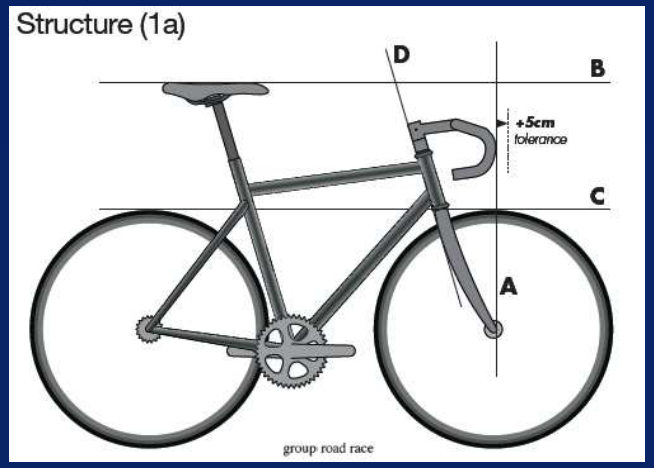

- Conformity of the handlebars
  - No extension
  - Only 5 cm tolerance between the front of the handlebar and the vertical line passing through the front wheel spindle
- Respect of the 3:1 rule for the frame, the fork, the handlebars and the seat post
- Dimensions of the tubes max 8 cm, min 2.5 cm (1 cm for stays/forks)
- Saddle position 5 cm behind the bottom bracket and saddle horizontal
- No protective screen, fuselage, fairing or integrated bottles
- Non standard wheels on the list of approved models
- No technical innovation not approved in advance on the bike
- Weight of the bike not less than 6.8 kg

Checks for massed start races

- List of non standard wheels in conformity with the article 1.3.018 used by the riders in competition to fill in and return to the commissaires before the race
- Thank you to provide the commissaires with a comprehensive, accurate list of wheels to be used by your riders
- The wheel is qualified as non standard if:
  - Less than 16 spokes
  - Width of the spokes larger than 2.4 mm
  - Height of the rim larger than 25 mm
- List of the equipment used by teams during the 2012 WorldTour is registered
- After the start of the approval process for the wheels (2012-2013), the label on the wheels will replace this list

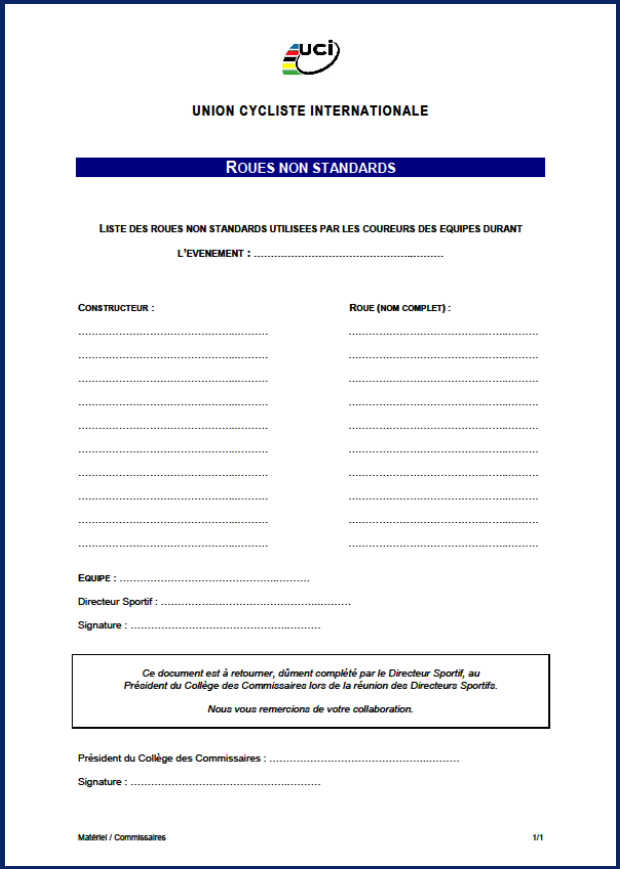

UNION CYCLISTE INTERNATIONALE

ROUES NON STANDARDS

LISTE DES ROUES NON STANDARDS UTILISEES PAR LES COUREURS DES EQUIPES DURANT L'EVENEMENT : .....

CONSTRUCTEUR :	ROUE (NOM COMPLET) :
.....	.....
.....	.....
.....	.....
.....	.....
.....	.....
.....	.....
.....	.....
.....	.....
.....	.....
.....	.....

EQUIPE : .....

Directeur Sportif : .....

Signature : .....

Ce document est à retourner, dûment complété par le Directeur Sportif, au Président du Collège des Commissaires lors de la réunion des Directeurs Sportifs.

Nous vous remercions de votre collaboration.

Président du Collège des Commissaires : .....

Signature : .....

Matériel / Commissaires 1/1

Checks for time trial events

- Measuring jig required for the checks
- Position of the handlebars extensions on the bicycle
- Morphological exemption of the handlebar extensions
- Position of the saddle on the bicycle
- Morphological exemption of the saddle
- Horizontal position of the forearms
- Horizontal position of the saddle
- Handlebar height
- Position of wheel axles
- Diameter of wheels
- Bottom bracket height

Check of the measuring jig

- The commissaires conducts a check before all time trial and track events to verify correct assembly and check that the measurement jig is accurate and displays the correct dimensions
- The measuring jig has to stand upright without any external assistance and be placed on horizontal ground in a stable position

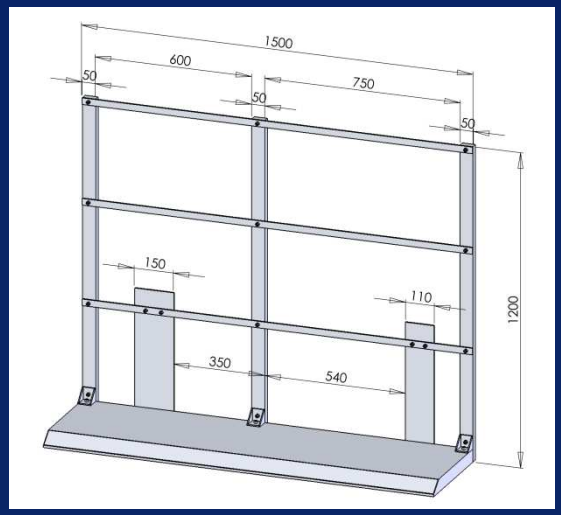

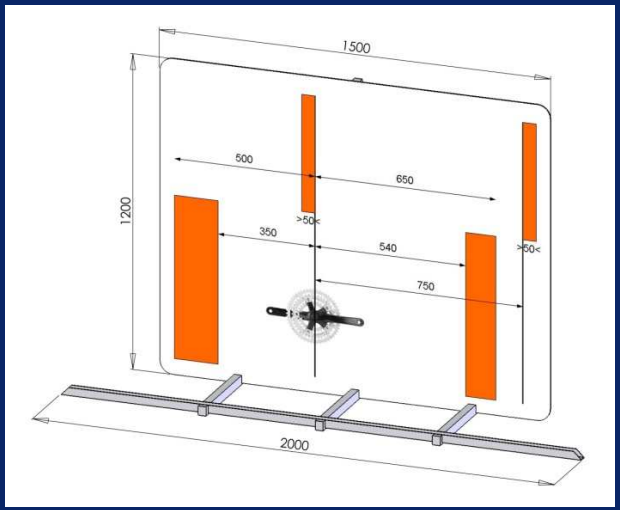

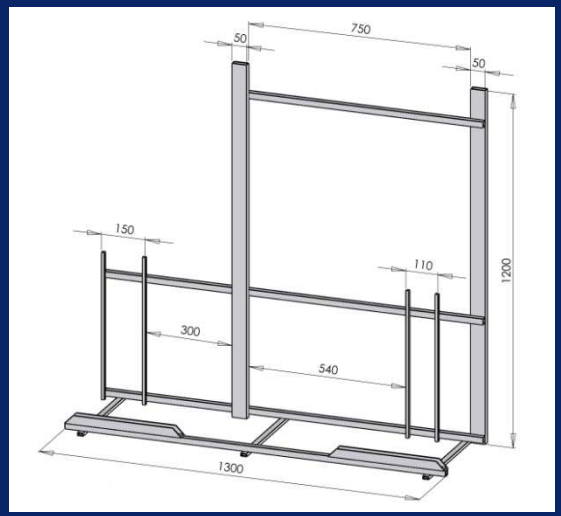

- The UCI is planning to produce official jigs and send them to the organizers

Positioning of the bike on the jig

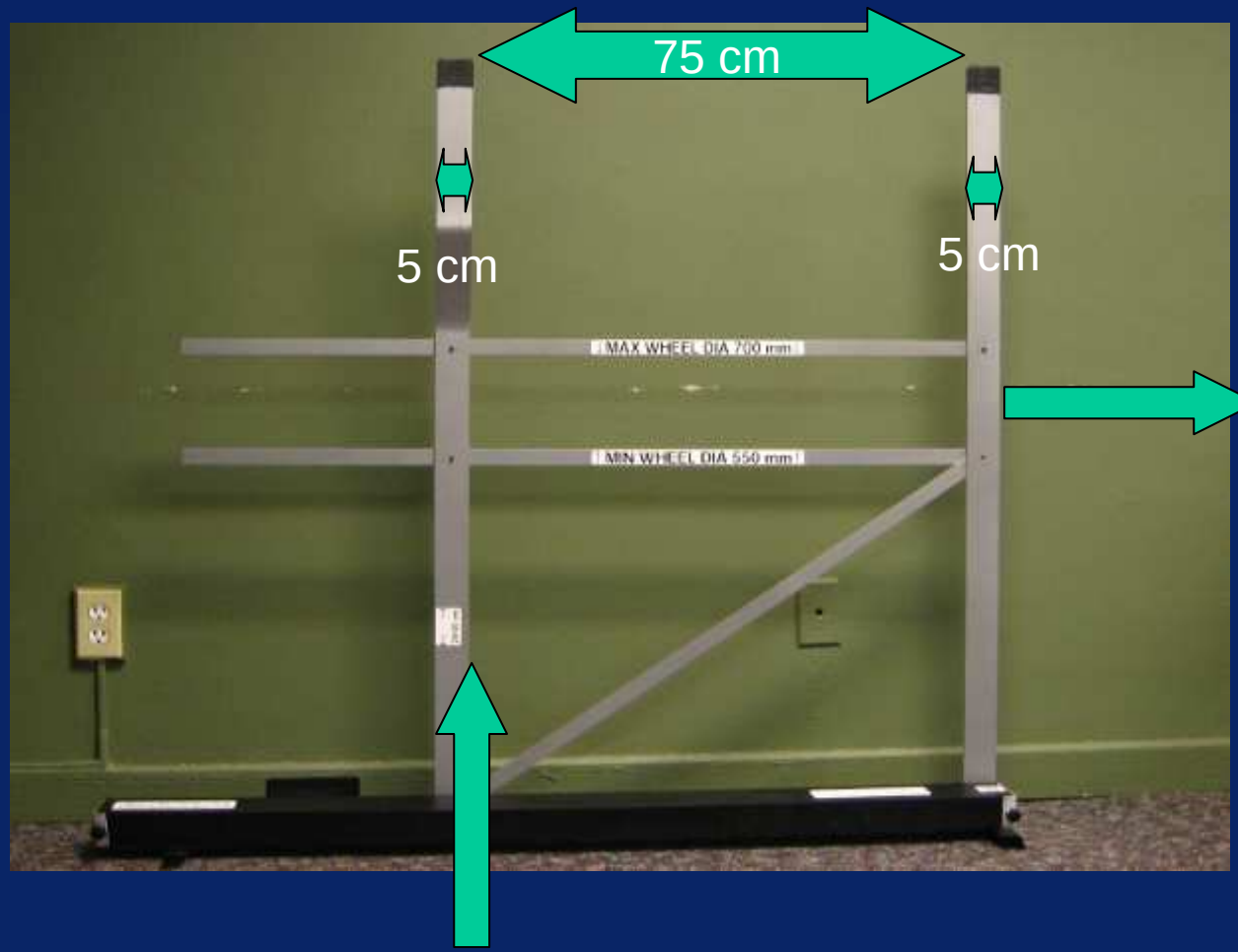

Front of the bike in this direction

Bottom bracket centered on front of rear vertical

Positioning of the bike on the jig

Center bottom bracket here

Positioning of the bike on the jig

- The spindle should be centered on the front edge of the vertical bar
- In this reverse angle photo, the front of the jig and bike are to the left

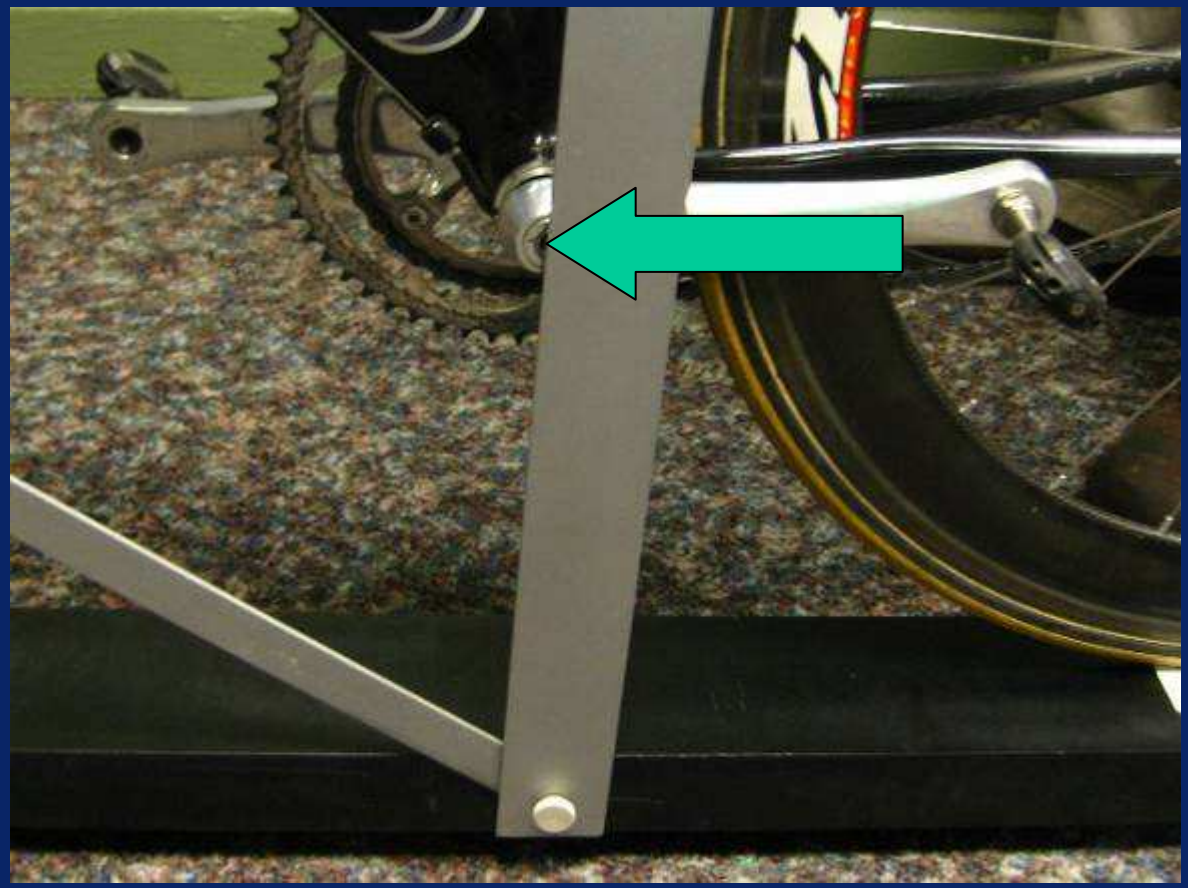

Length of handlebar extensions

- The distance between the extremity of the handlebar extensions and the vertical passing through the bottom bracket axle must not exceed 75 cm
- The 75 cm may be increased only to 80 cm for morphological reasons (large-sized riders), but the angle between the forearm and upper arm must not exceed 120° when the rider is in racing position
- In no case the extremity of handlebar extensions can exceed the limit of 80 cm
- Only one morphological exemption can be granted

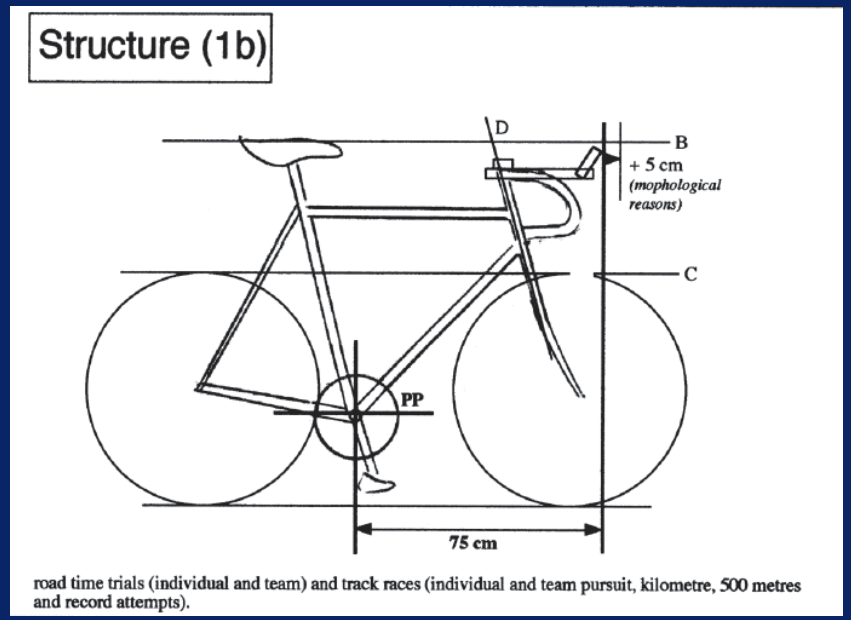

Length of handlebar extensions

- The distance between the extremity of the handlebar extensions and the vertical line passing through the bottom bracket axle is less than 75 cm
- This position passes and does not require the morphological test
- The 75 cm are measured to the end of the handlebar extension, axis of the lever (manual shifter) or extremity of the shifters (automatic, electronic)

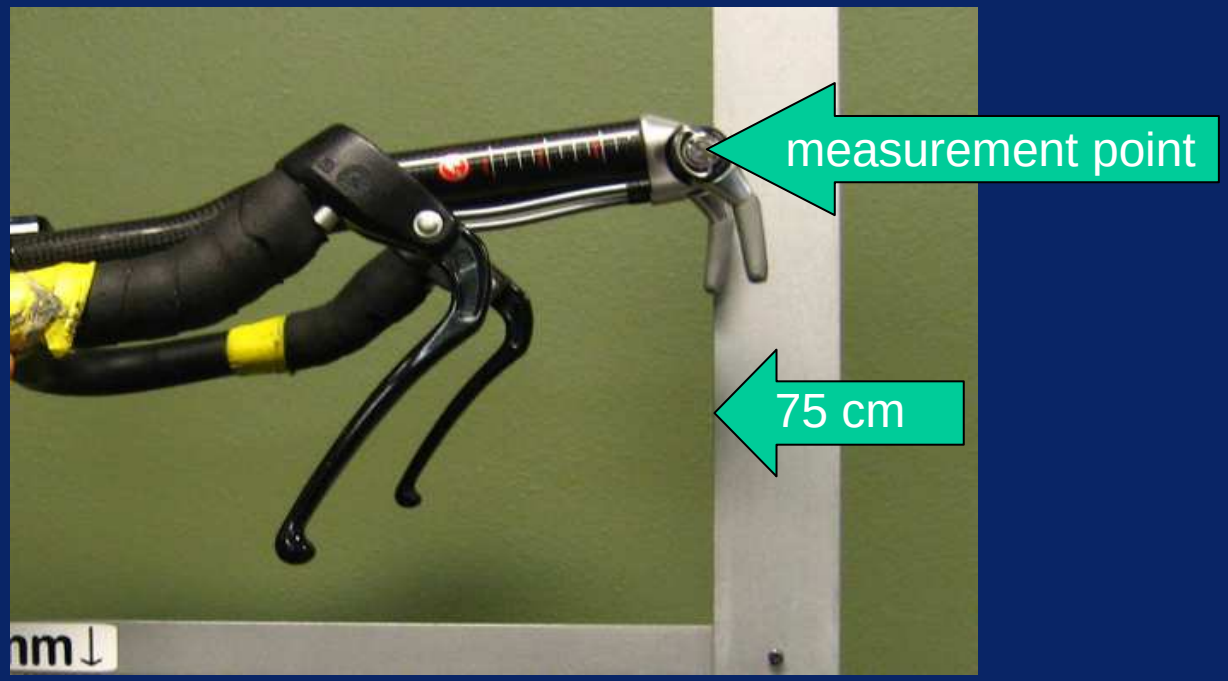

Position of the handlebar extensions

- The bar is right at the 80 cm limit
- Not possible to go beyond this point in any circumstance
- The pivot point of the manual shifter is the measurement point used
- The bike is legal if the rider passes the morphological exemption test

Position of the handlebar extensions

- This bar measure exceeds the 80 cm maximum limit
- The pivot point of the manual shifter is the measurement point used

This position is not legal

Measurement point - Shifters

- For standard manual shifters, the measurement is made from the axis of the gear lever
- The measurement is made from the extremity of any electric shifters or automatic shifters that return to their original position (whether horizontal or not) after the gears have been changed
- In discussion to make the measurements for all shifters at the extremity

Manual shifter

Automatic shifter

Electric shifter

Extensions morphological exemption

- The rider must use the farthest reach position
- The arms must be horizontal when on the extensions
- The rider must be in a normal riding position on the seat, not too far forward
- Measure of the angle from the protruding wrist bone to the elbow bone to the notch in the shoulder

This rider passes the 120° test

This rider fails the 120° test
His bars must be moved back

Position of the saddle

- The peak of the saddle must be a minimum of 5 cm to the rear of a vertical line passing through the bottom bracket spindle
- For morphological reasons, the peak of the saddle may be positioned less than 5 cm to the rear of a vertical line passing through the bottom bracket spindle, but when pedaling, the point of the rider's knee when at its foremost position must not pass beyond a vertical line passing through the pedal spindle
- In no case the peak of the saddle can exceed the vertical line passing through the bottom bracket spindle
- Only one of the two morphological exemption can be granted per rider

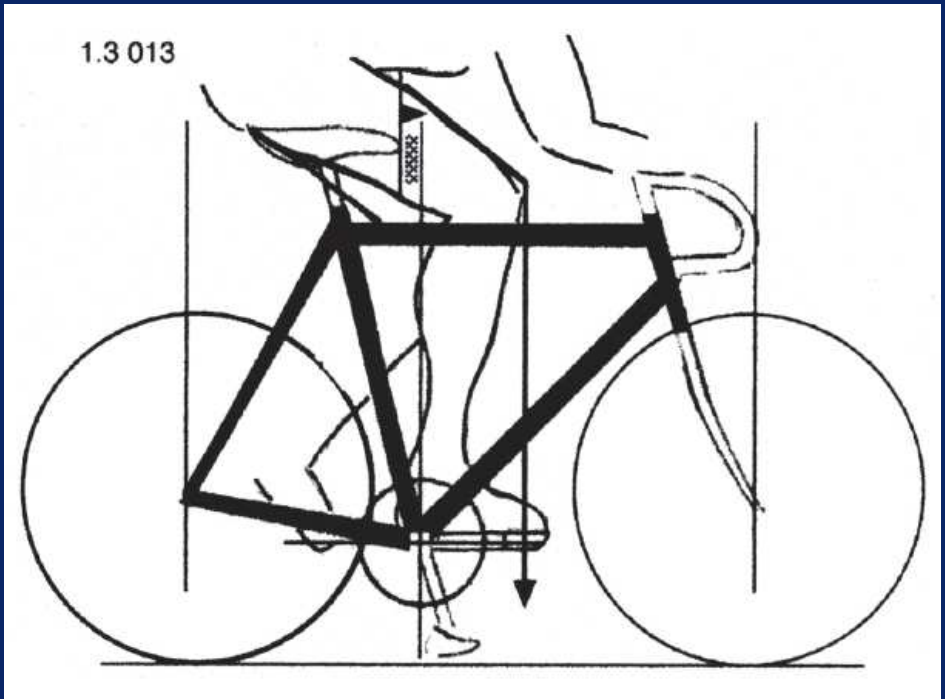

Position of the saddle

- This saddle is 5 cm behind the vertical line passing through the bottom bracket spindle
- This position is regulatory and does not require the morphological test

Position of the saddle

- The peak of this saddle is right on the vertical line passing trough the bottom bracket spindle
- Not possible to go beyond this point in any circumstance
- The knee morphological check needs to be performed except for some track events (sprint, keirin, flying 200 m, flying lap, 500 m and 1 km)

Saddle morphological exemption

- A T-square is used to check that the front of the knee, when at its foremost position, is behind the vertical line passing through the pedal spindle
- A plumb-line can also be used, but the rider must be on completely level ground
- The rider must be sitting in a normal riding position, not excessively far back on the saddle
- This rider passes the test

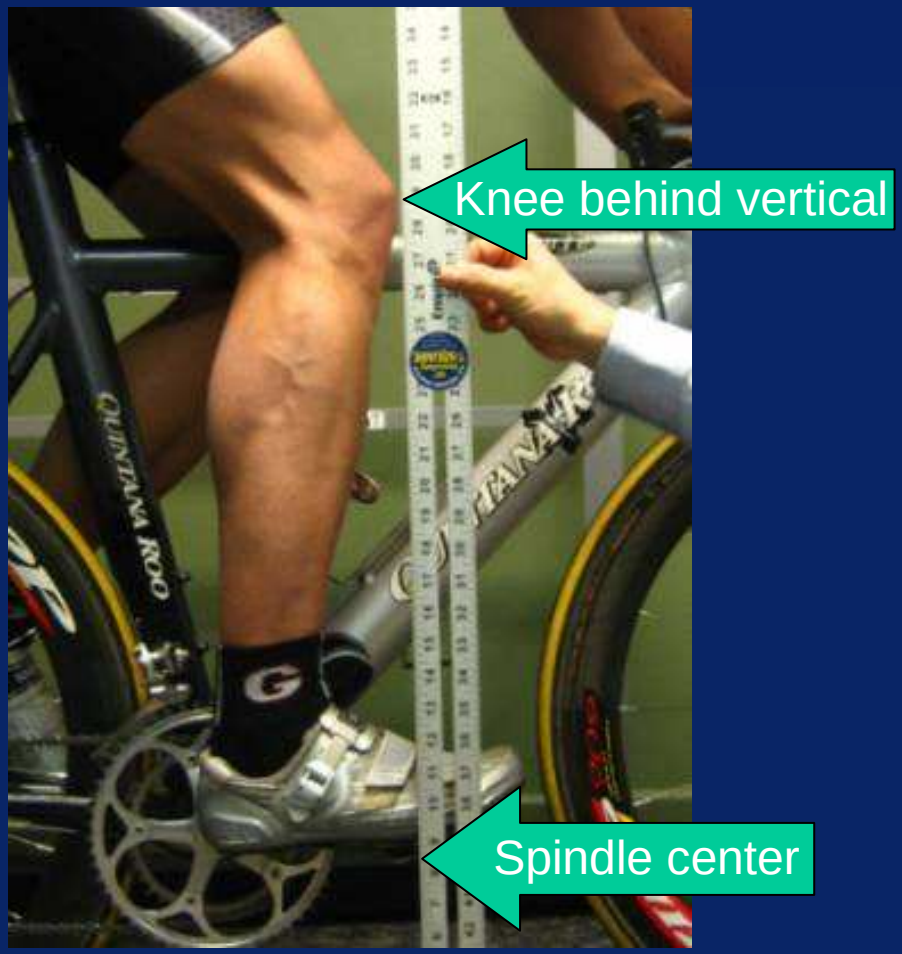

List of morphological exemptions

- After 1st January 2012, it is no longer necessary to complete the morphological exemptions list for the riders
- However, as before, only one of the two morphological exemptions can be granted per rider
- The morphological tests for the saddle exception (knee test) or the handlebar extensions exception (arm angle test) will be performed, if required, before the start of time trial races

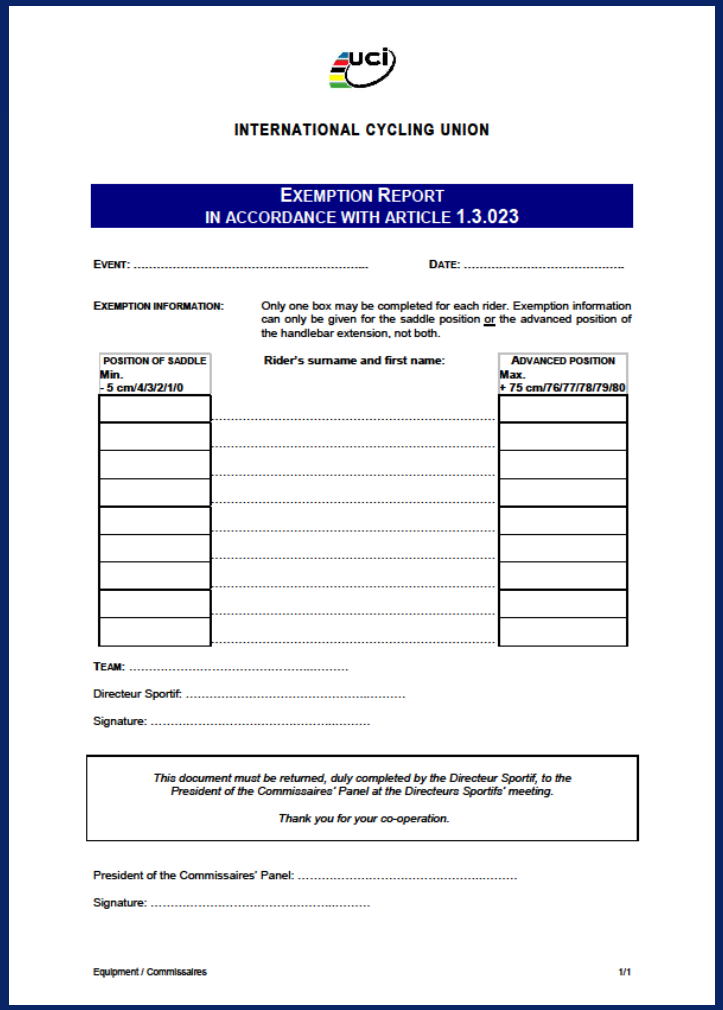

INTERNATIONAL CYCLING UNION

EXEMPTION REPORT
IN ACCORDANCE WITH ARTICLE 1.3.023

EVENT: ..... DATE: .....

EXEMPTION INFORMATION: Only one box may be completed for each rider. Exemption information can only be given for the saddle position or the advanced position of the handlebar extension, not both.

POSITION OF SADDLE Min. - 5 cm/4/3/2/1/0	Rider's surname and first name:	ADVANCED POSITION Max. + 75 cm/76/77/78/79/80

TEAM: .....

Directeur Sportif: .....

Signature: .....

This document must be returned, duly completed by the Directeur Sportif, to the President of the Commissaires' Panel at the Directeurs Sportifs' meeting.

Thank you for your co-operation.

President of the Commissaires' Panel: .....

Signature: .....

Equipment / Commissaires 1/1

Horizontal position of the forearms

- The forearms, when on the extensions, must be in a horizontal position (parallel to the ground) the entire race
- During the check, the hand of the rider must grab the highest point of the extensions (shifters)
- As there are many different shapes of bars, checking the position of the arms on the bars is the only way to ensure a correct horizontal position
- Incorrect position is possible with curved extensions and automatic shifters
- The extensions must be permanently fixed and not feature a system that would allow a change of length or angle during the race
- A limit of the height of the extensions is under study to check the position of the forearms only at the start of the race (not during the race anymore)

Incorrect positions

Horizontal position of the saddle

- The horizontal plane is determined from the highest points at the front and the back of the saddle
- An additional point of support (such as lumbar support) which could be obtained by tilting the saddle is not allowed
- An excessively sloping saddle can improve sporting performance of the rider to an unacceptable degree and has to be limited
- The length of the saddle must be 24 cm minimum and 30 cm maximum

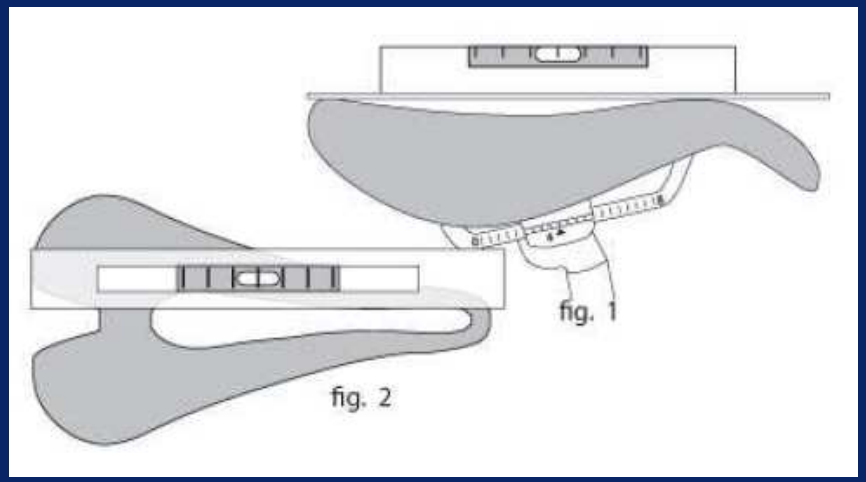

Horizontal position of the saddle

- From 1 March 2012, the horizontal plane of the saddle will be verified by measuring the angle of the saddle, established by a plane passing through the highest points at the front and rear of the saddle
- The angle must be less than 2.5° with an error tolerance of 0.5°
- If the measurement exceeds ±3 degrees, the saddle must be adjusted

Inclination ok

Inclination not ok

- The reference value is the measurement of the angle, but for events without the official measuring device, commissaires will measure the difference between the heights of the highest points of the front and rear of the saddle
- The tolerance for the height difference measured in this manner is 1 cm

Handlebars height

- Check that the handlebars and extensions lie above the plane of the top of the wheels and below the level of the top of the seat

Wheels axles position

- The rear wheel axle must fall 35 to 50 cm back from the bottom bracket
- The front wheel axle must fall 54 to 65 cm in front of the bottom bracket

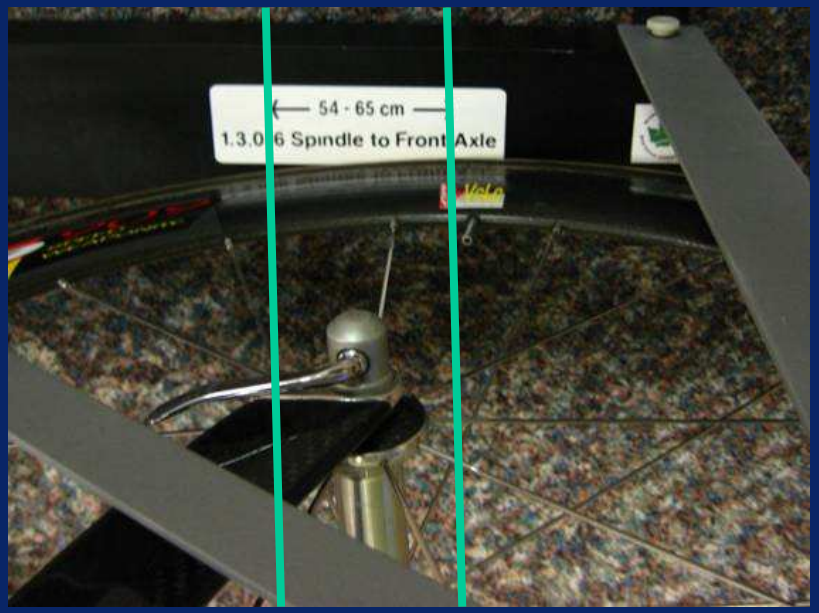

Wheels diameter

- The height of the wheels including the tire must be between 55 and 70 cm
- The height of the two wheels must be identical

Maximum 70 cm

Minimum 55 cm

Bottom bracket height

- The distance between the bottom bracket spindle and the ground must be between 24 cm minimum and 30 cm maximum

General checks

- Protective screens
- Wheel fairings
- Fuselage / 3:1 ratio
- Weight of the bicycle
- Clothing shape
- Clothing material
- Helmets
- Shoes / Shoe covers / Gloves
- Bottles
- Camelbacks
- Technical innovations
- Modification of the equipment
- European Standard on safety
- Hidden motors

Protective screens

- A protective screen is defined as a fixed component that protect or cover another element of the bicycle in order to reduce its wind resistance
- Protective screens are not allowed in competitions except for covers on the valves of disc wheels

- If a cover is added to a brake, it is considered integrated to the frame and has to comply with the 3:1 rule (together with the fork) and has to fit inside the 8 cm box of the fork
- This is checked during the UCI approval procedure

Wheel fairing

- The seat tube curving around the rear wheel must not enclose the wheel
- It should be possible to pass a rigid card between the tube and the wheel

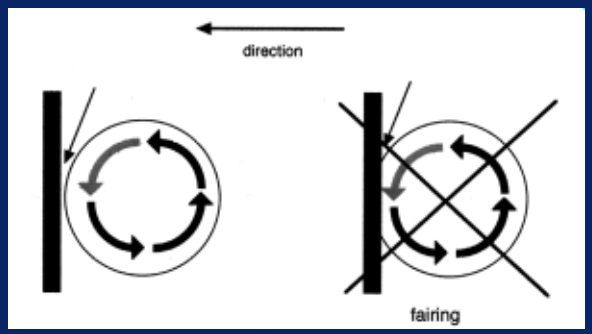

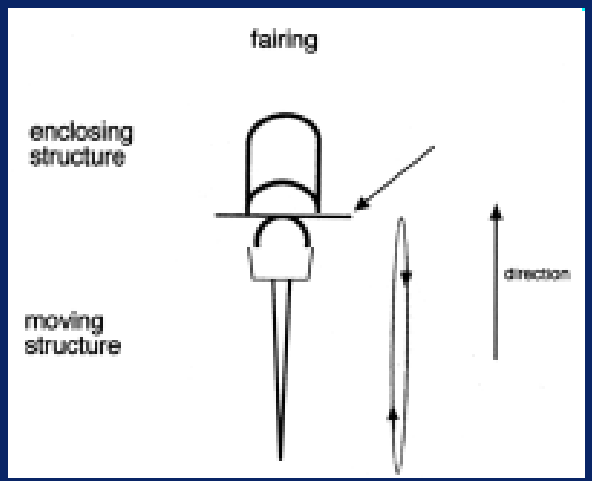

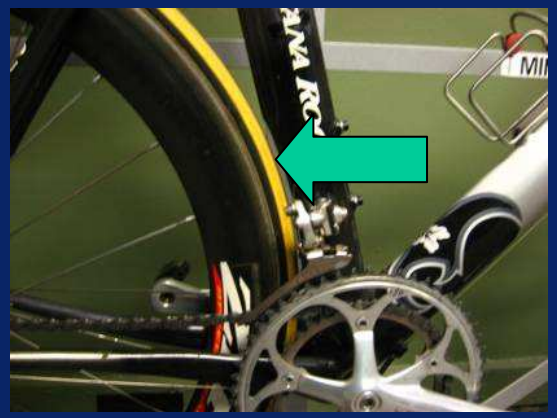

Fuselage / 3:1 ratio

- The 3:1 rule applies for the frame (blue areas in the drawing below), the fork, the handlebars, the extensions, the stem and the seat post
- A tolerance of 1 mm is accepted on the measure during the checks taking into account the thickness of the surface coating or painting
- The approval procedure will check this rule for the frames and the forks
- It is not allowed to add tape or modify the section of any equipment (handlebars, forks, etc.) to make it comply with this rule

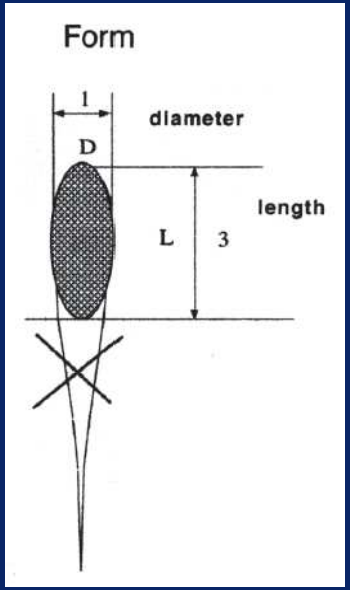

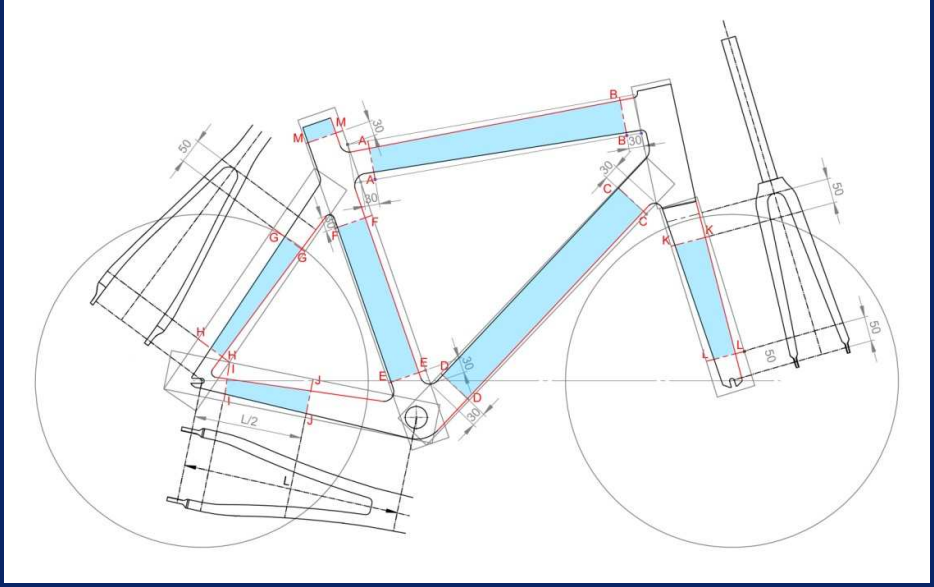

Weight of the bicycle

- The weight of the bicycle must not be less than 6.8 kg
- This is the primary rule on the safety of the bike required by the UCI
- Checks are conducted on some events (mountain stages)
- The UCI receives a lot of complaints about the safety of carbon frames, forks and handlebars that break immediately in a crash

- This limit could be removed only when it will be possible to prove that each part of the bicycle complies with specific and adapted safety standards for the competition
- Work in progress with European Standard and the industry

Clothing shape

- The apparel cannot be adapted to serve any other purpose apart from that of clothing
- It is not permitted to use clothing or skinsuit to which non-essential parts have been added in order to improve their aerodynamic nature, such as, for example, wings under the arms or an extension between the helmet and the jersey or the suit
- The clothing has to conform to the curve of the body in any case

Clothing material

- It is forbidden to wear items designed to influence the performances of a rider such as reducing air resistance or modifying the body of the rider (compression, stretching, support)
- Only “plain textile material” can be used for the apparel, with textile defined as a material made up of yarns and fibres which has an open mesh “fabric” structure
- No “mesh-closing” surface treatments or coatings are permitted except for logos and labels
- This rule does not apply to shoe covers, gloves or rain gear

Helmets

- Adding a removable cover is not allowed, but the visors are authorized if they are produced specifically for the helmet
- There is no regulation about the surface condition, or composition of the material used for the helmet, but it is not possible to add anything to it
- It is forbidden to incorporate electronic systems into apparel or helmets
- Dimensions of time trial helmets will be regulated

- Wearing a rigid safety helmet is mandatory
- The helmet must be approved by the official security standards, must not have been modified and must not have suffered any shock or accident

Shoes / Shoe Covers / Socks / Gloves

- All shoes that are given an aerodynamic shape by means of a non-essential addition, whether to the heel or front of the shoe will be prohibited
- No part of the shoes must exceed the height of the ankle
- From 1 October 2012, the use of shoe covers will be prohibited during events on a covered track

- Socks (and shoe covers) used in competition must not exceed the mid-distance between the ankle and the knee
- Gloves used in track competition cannot be mitten with only one, two or three separations between the fingers

Bottles

- From 1 January 2013, bottles will have to be located on the down and seat tubes on the inside of the frame and not be integrated to the frame
- The maximum dimensions of the cross-section of a bottle used in competition must not exceed 10 cm or be less than 4 cm and their capacity must be a minimum of 0.4 l and a maximum of 0.8 l
- As for the wheel fairing, it should be possible to pass a rigid card between the bottle and the tube where it is attached

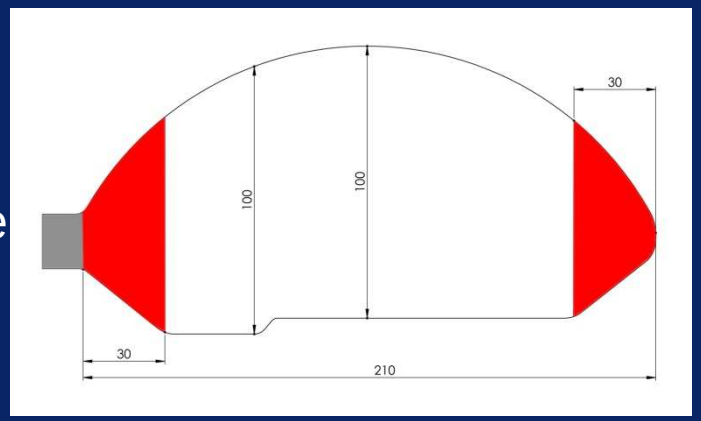

Camelbacks

- The use of camelback in competition is allowed, but only if used solely for hydration purposes and without aerodynamic covering
- The liquid container must not be rigid nor present a shape liable to be considered as having the objective of improving aerodynamics
- The morphology of the body must not change when the camelback is in place
- The contents must be limited to 0.5 litre
- From 1st April 2012, the camelback will have to be worn on the back only
- It is mandatory for the rider using this equipment to present it to the commissaires before the start in order to avoid any risk of illegal use

not allowed

allowed

Technical innovation

- By virtue of Articles 1.3.004 and 1.3.005 of the UCI Regulations and the Lugano Charter, the UCI has decided to no longer tolerate the presentation of technical innovations in competition as faits accomplis
- Technical innovations have to be submitted and approved by the UCI in advance to be allowed in competition

Adjustable seatpost

Delta7 frame

Sphinx handlebar

Modification of the equipment

- It is prohibited to modify the equipment used in competition in relation to the products supplied by the manufacturer, for obvious safety reasons
- Modifying the length of the saddle, adapting approved wheels, removing the dropout safety tab, adding tape to handlebars to meet the 3:1 rule, covering holes or screws with tape (except for the valve of disc wheels) or transforming any component of the bicycle
- No modification of equipment that is not conducted by the manufacturer is authorised by the UCI without prior approval
- Tape added for a better grip of the hands is the only exceptions, but it must be identifiable and used solely as the locations for the hands

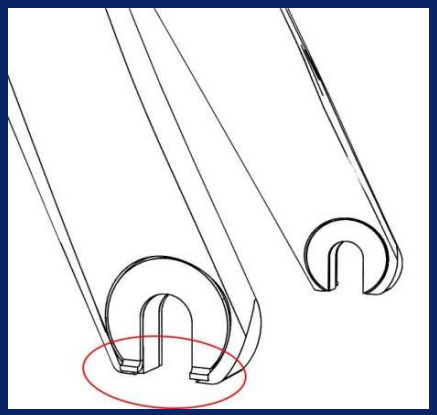

European Standards

- The UCI requires that the equipment used in competition must meet the applicable official quality and safety standards
- The EN label or another international safety label should be applied on all frames, forks, handlebars, wheels, etc. to prove that the equipment has been tested according to the applicable safety standards
- Teams mechanics and riders should be aware that there is a safety European Standard EN 14781 on bicycle equipment that they have to refer to when modifying or adjusting anything on a bicycle

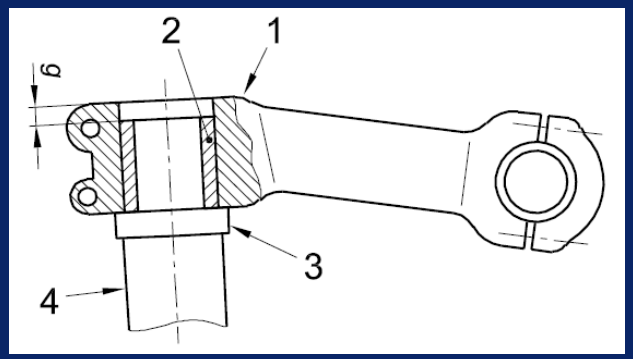

g < 5 mm

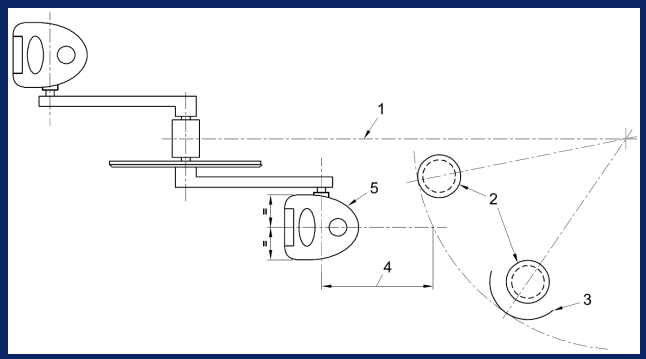

Distance 4 > 89 mm

Insertion-depth > 65 mm

Hidden motors

- Tour of France 2010: a control was made with an x-ray scanner to verify that no motor was hidden inside the frames

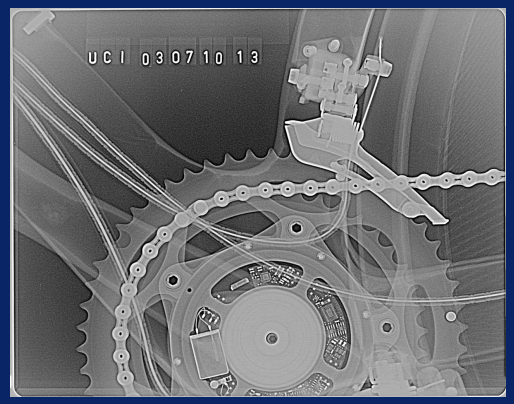

- Tour of France 2011: a control was made with a telescopic (endoscopic) camera after removing the saddle post
- In the future: controls will be made with a device measuring the eventual presence of magnetic induction inside the frame, a distinctive signal of the presence of a motor
- In case of doubt, the confirmation will be made with the aide of an industrial endoscope permitting the taking of photographs inside the frame
- These checks will be conducted by the Equipment Unit of the UCI

Approval of frames and forks

- Summary of the approval procedure for frames and forks
- Advantages of the approval procedure for frames and forks
- Chronology of the approval procedure for frames and forks
- A few examples of the « UCI frame » labels
- Meaning of the « UCI frame » labels
- Checks of the « UCI frame » labels
- Checks and sanctions by the UCI

Summary of the approval procedure

- All models of frames and forks under development on 1st January 2011 which had not reached the production stage have to get approved to be allowed in competitions (road, track, cyclo-cross)
- Approval procedure not mandatory for older models, but advised
- 3 different approval procedures:
  - "Monobloc" models (moulded): TT and track → full procedure Road and CX → intermediate procedure
  - "Tubular" models (assembled): All the disciplines → simplified procedure

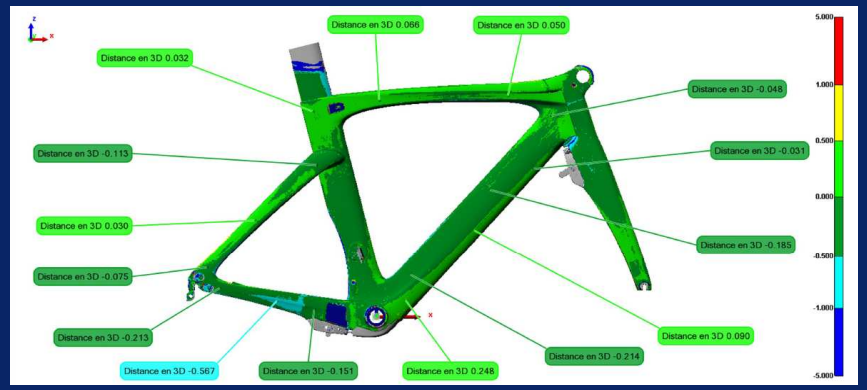

- Checks of the 2D drawings at the UCI and prototypes conformity verified by UCI at EPFL
- Approval label placed by the manufacturer only: visible, indelible and inseparable from the frame

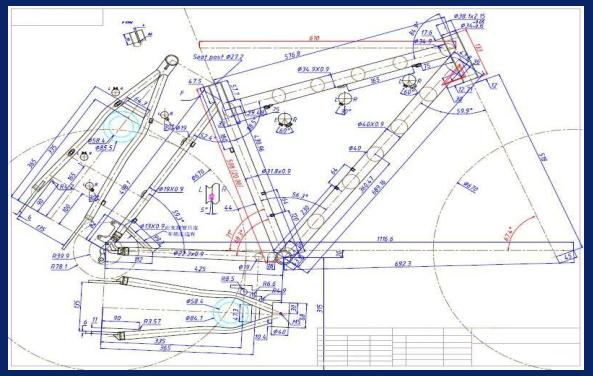

Avantages of the approval

- More professional image of the UCI who is controlling more efficiently the equipment used in competitions
- Reduction, facilitation and improvement of the checks to be carried out by the commissaires before an event
- Reassurance to riders and license holders that the model complies with the regulations in force
- Reassurance to avoid having a bike rejected or the arguments about the compliance of new equipment
- Better information of the regulations in force to the manufacturers before starting a mass production
- Respect of the UCI technical regulations to improve safety and fairness on events

UCI

Commissaires

Riders / Teams

Manufacturers/ Riders

Manufacturers / Teams

UCI / Raders / Manufacturers

Chronology of the approval

- **1st September 2010 :** Announcement by Pat McQuaid of the set up of an approval procedure for 2011 during the Eurobike
- **Sep - Dec 2010 :** Creation of the approval procedure with all the official documents, reports and certificates
- **29 December 2010 :** Beginning of the partnership with OpenTrust®
- **14 January 2011 :** Presentation of the approval procedure to the industry and acknowledgement of concerns and comments
- **1st February 2011 :** Enforcement of the current version of the approval procedure
- **3 March 2011 :** First approved models (Corima, Felt and Cannondale)
- **July 2011 :** First appearance of an approved model (Cannondale) with the label during the Tour of France
- **5 August 2011 :** 100th registration of approval request
- **3 September 2011 :** Many frames showing the “UCI frame” label during the Eurobike for the next season
- **November 2011 :** Situation after nine months of approval procedure
- **1st February 2011 :** Success of the approval procedure after one year

A few examples

Meaning of the “UCI frame” labels

- A List of the Approved Models of Frames and Forks is available on the Equipment page of the UCI website
- Approval is required for EVERY licence holders in ALL UCI events
- The “UCI frame” label applied on a frame means that the frame and the fork comply with the UCI regulations on geometry, but it doesn’t guaranty that the rider’s position is correct
- Checks of the position remain necessary, but there is no need to:
  - Check the triangular shape of the frame
  - Check the 3:1 rule on the elements of the frame and the fork
  - Measure the distance between the crank set axle and the wheels axle
  - Check the maximum dimensions of 8 cm and minimum of 1/2.5 cm
  - Check the geometry of the frame (sloping, seat stays inclination, compensation triangles,…)
  - Check the brakes integrated to the frame or the fork

Checks of the “UCI frame” labels

However, the commissaires will have to:

- Check that the applied labels fit with the manufacturers and models. Examples:
  - Pinarello, FPDUE, Road → PINA-FP2-RD
  - Scott, Plasma 3, TT → SCOT-PLA3-TT
  - Corima, VIF, Track → CORI-VIF-TR
  - Richard Sachs, Signature, CX → SACH-RSS-CX
- Note the identification codes of the frame if there is a doubt or a conformity problem
- Check that the labels are 3 cm tall, visible, indelible and cannot be removed from the frame

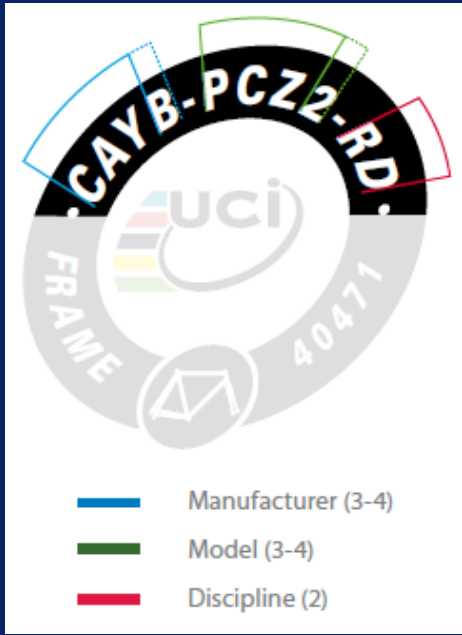

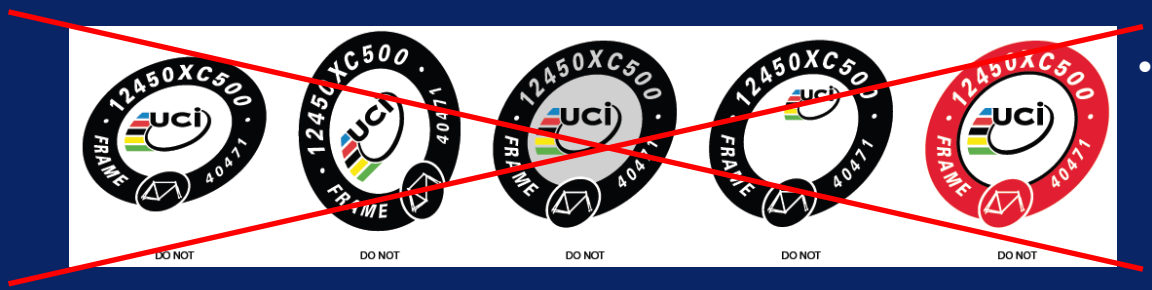

- Inform the UCI about suspicion cases of models produced after 2011 without a label

Checks and sanctions by the UCI

- Random compliance checks will be carried out by the UCI on approved models with a special measuring device at any road, track or cyclo-cross events
- If an approved model with a UCI label is found not to conform :
  - Approval of the model may be withdrawn
  - Fine of between CHF 10,000 and 100,000

  } manufacturer responsible

  - License holder immediately disqualified
  - Investigation into the relevant team
  - Performances are not recognized

  } license holder responsible
- Check in progress of all the models used during the WorldTour with the help of the list of the equipment used by the teams in 2012
- These dimensional checks can also be done on older models to verify their compliance with the UCI regulations
- A check that models without label were effectively produced before 2011 will also be carried out

Conclusion

- A lot of checks have to be conducted by the commissaires in a very short time
- Not easy work for the commissaires, please be understanding, cooperative and have the equipment checked sufficiently in advance
- The UCI is working to get clear and repeatable check procedures on equipment (inclination of the saddle and the forearms, etc.)
- Never hesitate to ask the UCI or the commissaires if in doubt
- The approval procedures will facilitate and improve the checks done by the commissaires on equipment, but the checks on position remain
- Rules have to be enforced for the fairness and safety in competition and to avoid disadvantaging rule-abiding riders